TEAR SHEET

Parkington 10" Globe Flush Mount

Item # CHC 4526AB-CG

Designer: Chapman & Myers

Height: 14"
Width: 10"
Canopy: 4.5" Round
Finishes: AB, BZ, PN
Glass Options: CG, WG
Socket: E26 Keyless
Wattage: 15 LED A19
Weight: 5 Pounds
Note: UL Only

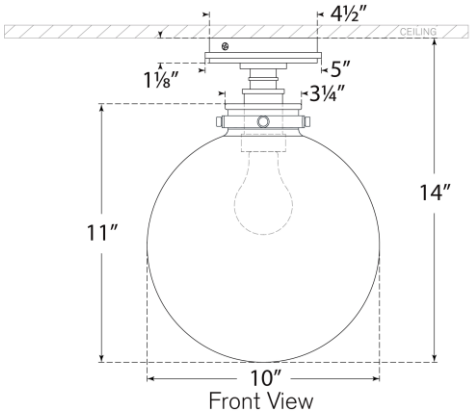

Front View

Top View

VISUAL COMFORT & CO.

DAMP LED 4